Hellenic Journal of Psychology, Vol. 6 (2009), pp. 145-168

SUBJECTIVE PSYCHOLOGICAL DISTRESS AMONG YOUNG ADULTS: THE ROLE OF GLOBAL AND CONTEXTUAL LEVELS OF SELF-DETERMINED MOTIVATION

Étienne Julien, Frédéric Guay, Caroline Senécal, & Sarah-Caroline Poitras
Laval University, Québec, Canada

Abstract: The purpose of this study was to contrast two perspectives on the linkages between levels of self-determined motivation and subjective psychological distress. The first perspective posits that global self-determined motivation (i.e., a trait) is more negatively related to psychological distress than contextual self-determined motivations in leisure, interpersonal relationships, and education. The second perspective, in contrast, posits that self-determined motivation in these three contexts are more negatively related to subjective psychological distress than global self-determined motivation. Participants were 1039 college students who collaborate to a five-year prospective study. Results from structural equation modeling provided more support for the second perspective than for the first one. Discussion centers on the theoretical and practical implications of the results.

Key words: Contextual levels of motivation, Global levels of motivation, Self-determination, Subjective psychological distress.

INTRODUCTION

Subjective psychological distress consists of individuals' evaluations of their feelings of anxiety, depression, irritability, and paranoid ideations (Boyer, Préville, Légaré, & Valois, 1993). Psychological distress has been considered as a serious problem for both

Acknowledgement: This article was prepared with the financial support of the Social Sciences and Humanities Research Council of Canada and the Canada Research Chair program.
Address: Frédéric Guay, Chairholder of the Canada Research Chair on Motivation and Academic Success, Department of Basic and Applied Education, Faculty of Educational Sciences, Laval University, Quebec, G1K 7P4 Canada. Phone: +1-418-6562131 Ext. 2379. Fax: +1-418-6562885. E-mail: Frederic.Guay@fse.ulaval.ca

the individuals and the society. As pointed out by some scholars (Diener, Shigehiro, & Lucas, 2003), it is hard to imagine that an ideal society will be formed of individuals who feel anxious, depressed, irritable and who have paranoid ideations. Subjective psychological distress could be conceptualized as a momentary state or as an enduring trait. Researchers interested in the quality of life usually focus on the trait perspective rather than on the short-term fluctuations of it (Eid & Diener, 2004). Accordingly, in the present study we focus on global judgments of subjective psychological distress.

Self-Determination Theory (SDT; Deci & Ryan, 1985,1991) posits that subjective psychological distress occurs when individuals demonstrate a weak sense of *self-determined motivation*, that is, when their actions are not regulated by their personal choices and interests. Why such a relation should prevail? Based on an organismic perspective, SDT posits that the level of self-determined motivation experienced by individuals indicate whether or not they have satisfied their psychological need for autonomy (need for self-initiated actions), an essential nutriment for growth. In domains in which this need is not satisfied, behavior should not be self-determined and psychological difficulties should follow.

Although several studies have focused on the relation between self-determined motivation and psychological distress (or akin constructs), few of them have taken into account motivational levels of generality. Specifically, self-determined motivation is not only a trait-like construct but also it is hypothesized to regulate behavior in broad life contexts such as education, leisure, and interpersonal relationships (Vallerand, 1997). The identification of the appropriate level of generality linked to psychological distress has been recognized by many theorists (Emmons, 1995; McAdams, 1995) as critical issue for personality research. Indeed, it is not only important to understand individuals on their trait-like characteristics, but also on their experiences across their important life contexts in order to understand the complexity of human life.

The present article deals with this critical question with respect to two levels of self-determined motivation, namely global (trait-like concept) and contextual levels. In other words, is global self-determined motivation an adequate predictor of global judgments of subjective psychological distress, or should motivational experiences in different contexts be examined in order to understand subjective psychological distress? The purpose of this study was thus to contrast two perspectives on the linkages between levels of self-determined motivation and subjective psychological distress. The first perspective is based on Vallerand's (1997) Hierarchical Model of Motivation whereas the second perspective is based on self-concept theory and work (Marsh & Yeung, 1998) and studies that put emphasis on life contexts (Diener et al., 2003).

In the following sections, we will first provide a definition of self-determined motivation and a brief literature review on the relations between self-determined motivation and subjective psychological distress. We will then describe in details two perspectives on the linkages between levels of self-determined motivation and global judgments of subjective psychological distress.

Self-determined motivation

Deci and Ryan (1985) proposed that there are different types of motivation, reflecting different levels of self-determination or autonomy. *Intrinsic motivation* reflects the highest degree of self-determination. It refers to engaging in an activity for its own sake and the experience of pleasure and satisfaction derived from participation (Deci, 1975; Lepper, Greene, & Nisbett, 1973). *Extrinsic motivation* refers to engaging in an activity as a means to an end rather than for its intrinsic qualities (Deci, 1975). Although some scholars have argued that extrinsic motivation refers uniquely to behaviors displayed in the presence of external control sources (e.g., rewards and punishments), other types of extrinsic motivations are now recognized (Deci & Ryan, 1985). These types of extrinsic motivations, from the lowest to the highest level of self-determination, are external regulation, introjected regulation, and identified regulation. *External regulation* implies that the person behaves in a certain way in order to obtain a reward or to avoid a punishment. In the case of *introjected regulation*, individuals begin to internalize the reasons which push them to perform activities. However, this form of internalization is still not self-determined because it is limited to the internalization of external control sources. *Identified regulation* refers to behaviors that are performed by choice because the individual judges them as important.

Finally, *amotivation* is the least self-determined form of motivation. Amotivated people have very low expectancies regarding actions. They do not feel competent about them and do not expect their actions to result in the desired consequences. This construct is similar to learned helplessness (Abramson, Seligman, & Teasdale, 1978).

Researchers (Ryan & Connell, 1989) have used these motivational concepts to compute an index of self-determined motivation by contrasting the relative importance of self-determined types of motivation (intrinsic and identified regulation) comparatively to non self-determined ones (introjected regulation, external regulation, and amotivation). According to this index, actions and goals of self-determined people are chosen in an authentic manner and reflect central aspects of their self. These individuals thus experience a sense of integrity and

congruence between their behaviors, feelings, and their self. Individuals who act for these self-determined reasons are more satisfied with their life and feel less psychological distress. On the other hand, the actions and goals of non self-determined people do not represent their personal interests and values, but are instead imposed on them by external pressures. These individuals may therefore be excessively controlled by values, standards and regulation processes that are not integrated into their self.

Various studies have assessed the relation between self-determined motivation (or akin motivational constructs) and mental health. For instance, Kasser and Ryan (1993, 1996) focused on the effects of intrinsic or extrinsic aspirations on the psychological well-being of adults and adolescents. Intrinsic aspirations reflect self-determined goals based on the authentic self, such as meaningful relationships, personal growth and interest in the community. Extrinsic aspirations such as fame, wealth and image require recognition by other people in order to be gratifying and then reflect non self-determined goals. These authors showed that people who attach more importance to intrinsic aspirations have better psychological well-being (as defined by actualization, vitality and less depression, anxiety, narcissism and physical symptoms) than those who attach importance to extrinsic aspirations (see also Nix, Ryan, Manly, & Deci, 1999; Ryan, Chirkov, Little, Sheldon, Timoshina, & Deci, 1999; Ryan & Frederick, 1997; Sheldon & Kasser, 1995).

A number of studies have evaluated the relation between self-determination toward various contexts and subjective well-being on a daily basis. It was demonstrated that the days when people feel the most self-determined are also the days when they feel their best, after having controlled for trait-level of self-determination (Reis, Sheldon, Gable, Roscoe, & Ryan, 2000; Sheldon & Elliot, 1999; Sheldon, Ryan, & Reis, 1996). Sheldon, Ryan, Rawsthorne, and Ilardi (1997) showed that self-determined motivation toward some important life domains (studies, work, family, love and interpersonal relationships) is linked with subjective well-being, after the influence of personality traits of the Big 5 have been controlled for. Finally, Pelletier, Vallerand, Green-Demers, Brière, and Blais (1995) also demonstrated that engagement in leisure activities when governed by self-determined motivation is positively associated with the global psychological well-being of individuals.

In sum, previous studies indicate that the psychological distress (or low levels of well-being) of individuals results not only from personality-based motivation but also from motivations which govern their daily activities. However, the question of which level of self-determined motivation is the best predictor of psychological distress remains unclear.

Levels of generality of self-determined motivation

Over the past decades, several hierarchical models have been proposed to better understand the dynamic interplay among psychological constructs. For example, Bretherton (1985) proposed a hierarchical model of attachment representations where maternal attachment security influences the security of all attachment relationships. Similarly, hierarchical models of the self usually propose a general self-concept and self-concepts toward different activities (e.g., academic and physical; Shavelson, Hubner, & Stanton, 1976) where global and specific elements are theoretically expected to influence each other. Vallerand (1997) proposed a hierarchical model of self-determined motivation where self-determined motivation operates and interacts at various levels, including the global level (or personality level; Deci & Ryan, 1985) and the life domains or contextual level (Guay & Vallerand, 1997). *Global self-determined motivation* refers to the relatively stable individual differences which predispose the person to interact with the environment in a self-determined or non self-determined way (Vallerand, 1997). *Contextual self-determined motivation* refers instead to one's usual motivational orientation toward a specific context (e.g., leisure, education, interpersonal relationships; Vallerand, 1997).

Two perspectives will be contrasted in order to better understand the relations among global self-determined motivation, contextual self-determined motivations (toward leisure, interpersonal relationships and education) and global subjective psychological distress. The *first perspective* is based on the Hierarchical Model of Motivation (Vallerand, 1997). According to this model, the degree of generality of the different consequences depends on the level of self-determined motivation. Thus, the consequences of global self-determined motivation should be global (e.g., global subjective psychological distress). However, the consequences of contextual self-determined motivation should be related to the area of life concerned. For example, non self-determined motivation toward school has been found to be associated with a higher drop-out rate among students (Vallerand & Bissonnette, 1992; Vallerand, Fortier, & Guay, 1997). Thus, based on the Hierarchical Model of Motivation (Vallerand, 1997), global self-determined motivation would be associated more negatively to subjective psychological distress than self-determined motivation in three contexts of life important for young adults, namely education, interpersonal relationships, and leisure. In other words, this perspective posits that the global self-determined qualities are those that matter the most when it comes to predict how a person feel good or bad in general. This position is similar to the one endorsed by personality researchers who propose

that personality traits are directly related to subjective well-being (see Diener et al., 2003 for review).

The *second perspective* is based on some self-concept studies (Marsh & Yeung, 1998) and studies that put emphasis on life contexts (Diener et al., 2003). Although self-concept is not equivalent to self-determined motivation, work on self-concept could be useful to understand how global and contextual motivations relate to subjective psychological distress. Indeed, like self-determined motivation, self-concept operates at the general level and toward different activities (Shavelson et al., 1976). Moreover, there is a moderate relation between self-concept and motivation (Guay, 2006). In contrast to the first perspective outlined above, work on self-concept (Marsh & Yeung, 1998) suggests that global constructs do not allow for a significant prediction of consequences related to the self when the person's more specific self-evaluations are taken into consideration. Marsh (1990) suggested that while answering a global measure of self-concept, respondents may simply base their responses on their immediate experience, mood, or the contents of their short-term memory, instead of making real global judgments. In support of this position, Marsh and Yeung (1998) reported that global self-concept measures are less stable over time than specific ones. Similarly, Guay, Mageau, and Vallerand (2003) revealed that global self-determined motivation is not more stable than academic self-determined motivation over a one year and a five years period. Furthermore, in the Guay et al. (2003) study the stability coefficient of global motivation over five years was .38 whereas some studies reveal higher stability coefficients on the big five personality components for a five-year period (e.g., correlations ranged between .56 to .61; Neyer & Asendorpf, 2001). These previous studies thus provide weak support for the fact that global motivation could be categorized as a personality construct.

Accordingly, global measures do not take into account the complexity and the variation of self-perceptions which may impair the ability to understand and predict behavior (Marsh & Yeung, 1998). Marsh and Yeung (1998) therefore conclude that measures that are more specific to different important areas of life would be more useful than the global scales for understanding the consequences related to the self.

In addition, one advantage of looking at self-determined motivation in important life contexts to understand global psychological distress is that such specific evaluations are context sensitive in that self-determined motivation in these contexts capture, to some extent, the effects of parents, peers, and teachers for instance (see Guay et al., 2003). Indeed, parents, peers, and teachers could use supportive vs. controlling techniques that could bolster or impede self-determined

motivation in these life contexts. As argued by some scholars, life contexts have important implications for well-being beyond the effects of personality traits (Diener et al., 2003) especially when these contexts are important to one's self-definition and/or culturally prescribed (Sanderson & Cantor, 1999).

In sum, according to this second perspective, global self-determined motivation should be less related to subjective psychological distress than self-determined motivation in leisure, interpersonal relationships, and education. Put it differently, this perspective posits that the self-determined qualities in different life contexts are those that matter the most when it comes to predict whether a person feel good or bad in general.

The present study

The aim of the present study was to contrast the two perspectives mentioned above to better understand the relations between global motivation, contextual motivations (toward leisure, interpersonal relationships and education) and subjective psychological distress. The design used is a five-year prospective design in which global and contextual self-determined motivations were assessed in 1994 (Time 1), whereas subjective psychological distress was measured five years later in 1999 (Time 2). Support for the first perspective will be obtained if the relation (correlations and path coefficients) between prior global motivation and subsequent psychological distress will be higher than the relations between contextual motivations and psychological distress. Alternatively, support for the second perspective will be obtained if the relations between contextual self-determined motivations and subjective psychological distress are higher than the one involving global self-determined motivation and psychological distress.

METHOD

Participants – Procedure

Data from this study were obtained from a longitudinal project on motivation (Guay & Vallerand, 1999). This project included one wave of data collection in 1994 with a follow-up data collection in 1999. In March 1994, 1039 French-Canadian college students completed four motivational measures (Global, Academic, Interpersonal Relationships, and Leisure Motivation Scales). Questionnaires were administered in the college classroom by research assistants.

In March 1999, a research assistant attempted to contact these 1039 students. Of the 1039, 360 were reached either by phone or by mail. Finally, of those 360 participants, 201 agreed to participate in the second wave of testing. The potential problem of missing values will be addressed later on. Among those 201 participants, 143 were females, 58 were males and the mean age was 24 years (SD = 2.66). In the 1999 data collection, participants completed various measures, including a psychological distress measure.

Measures

The Global Motivation Scale. The Global Motivation Scale (GMS; Guay, Mageau, & Vallerand, 2003) assesses three types of intrinsic motivation (toward knowledge, stimulation, and accomplishment; see Vallerand, 1997; Vallerand & Bissonnette, 1992), three types of extrinsic motivation (i.e., identified, introjected, and external regulation), and amotivation. There are 4 items per subscale and thus a total of 28 items. However, in the present study, we eliminated the introjection subscale from the GMS to allow a better comparison between the global and contextual variables since the contextual self-determined motivation measures used in the present study did not include the introjection subscale. Each item represents a possible reason for doing things in general. Items are scored on a 7-point Likert-type scale ranging from 1 (does not correspond at all) to 7 (corresponds completely). The GMS has demonstrated high levels of construct and concurrent validity as well as internal consistency. In the present study, Cronbach's alphas for the six subscales ranged from .69 to .93. Sample items are presented in the Appendix.

The Academic Motivation Scale. The French version of the Academic Motivation Scale (AMS; Vallerand, Blais, Brière, & Pelletier, 1989) assesses students' motivation toward educational activities. The AMS is composed of seven subscales. However, in the present study we used the abridged version containing 4 subscales. There are 4 items per subscale and thus a total of 16 items. Each item represents a possible reason for going to school. One subscale assesses intrinsic motivation, two subscales assess types of extrinsic motivation (identified regulation and external regulation) and one subscale assesses amotivation. Items are scored on a 7-point Likert-type scale ranging from 1 (does not correspond at all) to 7 (corresponds completely). The AMS has demonstrated high levels of construct and concurrent validity as well as internal consistency (see Fairchild, Horst, Finney, & Barron, 2005; Vallerand et al., 1989, 1992, 1993). In the present study, Cronbach's alphas for the four subscales ranged from .69 to .91. Sample items are presented in the Appendix.

The Interpersonal Motivation Scale. This scale was developed and validated in French by Blais, Vallerand, Pelletier, and Brière (1994). The original seven-subscale version consists of 28 items. Participants had to answer the following question: "Why do you have relationships with your friends?". Each item represents a possible answer to this question. These reasons are scored on a 7-point Likert-type scale ranging from 1 (does not correspond at all) to 7 (corresponds completely). However, in the present study, we used the abridged version containing four subscales. One subscale assesses intrinsic motivation, two subscales assess types of extrinsic motivation (identified regulation and external regulation) and one subscale assesses amotivation. Four possible answers are given for each of the four motivations, yielding a 16-item scale. In the present study, Cronbach's alphas for the four subscales ranged from .71 to .90. Sample items are presented in the Appendix.

The Leisure Motivation Scale. This scale was developed and validated in French by Pelletier et al. (1995). The original seven-subscale version is consists of 28 items. Each item represents a possible answer to the following question: "Why do you engage in leisure activities?". The reasons given are scored on a 7-point Likert-type scale ranging from 1 (does not correspond at all) to 7 (corresponds completely). In the present study, we used the abridged version containing four subscales. One subscale assesses intrinsic motivation, two subscales assess types of extrinsic motivation (identified regulation and external regulation) and one subscale assesses amotivation. Four possible answers are given for each of the four motivations, yielding a 16-item scale. In the present study, Cronbach's alphas for the four subscales ranged from .63 to .84. Sample items are presented in the Appendix.

Psychological Distress Scale. This scale assesses four indicators of psychological distress, namely depression, anxiety, irritability, and paranoid ideations. Each item assesses the frequency of a psychological symptom on a 4-point Likert-type scale ranging from 1 (not at all) to 4 (often). The depression, anxiety and irritability subscales are abridged versions from the Psychiatric Symptoms Index subscales (Ilfeld, 1976). These subscales were adapted and validated in French for the Santé-Québec survey on mental health (Gouvernement du Québec, 1995). The first subscale assesses anxiety (6 items, Cronbach's $\alpha = .73$; e.g., "Have you been feeling under pressure?") whereas the second subscale assesses irritability (4 items, Cronbach's $\alpha = .75$; e.g., "Have you been feeling easily annoyed or irritated?"). The third subscale assesses depression (10 items, Cronbach's $\alpha = .84$; e.g., "Have you been feeling low in energy or slowed down?"). Finally, the fourth subscale is an abridged version of the paranoid ideations subscale from the "Symptoms Checklist 90" (Derogatis & Melisaratos, 1983). It was also adapted and validated in French for the Santé-Québec survey on mental health (1995). An example of

item is: "Have you been feeling that others are to blame for most of your problems?" Cronbach's alpha for this subscale (6 items) was .73.

Statistical analyses

Measurement strategy. To reduce the number of variables involved in the study, we computed self-determination indices for our four motivational scales (Fortier, Vallerand, & Guay, 1995; Grolnick & Ryan, 1987; Senécal, Vallerand, & Guay, 2001; Vallerand, 1997). This was done by ascribing each item a specific weight and then summing the products. Consequently, intrinsic motivation and identified regulation items were assigned the score of +2 and +1, respectively (higher self-determined forms of motivation) whereas amotivation and external regulation were attributed the weights of -2 and -1, respectively. For contextual motivations, there were four items for each motivational construct and consequently four indicators per latent construct were computed using the following formula: (-2*amotivation) + (-1*external regulation) + (1*identified regulation) + (2*intrinsic motivation). For global self-determined motivation, the same formula was used, but the intrinsic motivation score was composed of the three intrinsic motivations subscales (stimulation, accomplishment, knowledge). Mean scores on the anxiety, irritability, paranoia, and depression scales served as the four different indicators of the psychological distress latent construct.

Goodness of fit. All structural equation modeling analyses were performed on covariance matrices using the Maximum Likelihood estimation procedure (EQS Version 5.6; Bentler, 1993). To ascertain the model fit, we used the Comparative Fit Index (CFI), the Non-Normed Fit Index (NNFI), the Root Mean Square Error of Approximation (RMSEA) as well as the chi-square test statistic. The NNFI and CFI vary along a 0-to-1 continuum (although the NNFI could be greater than 1), where values greater than .90 are typically taken to reflect an acceptable fit (Schumacker & Lomax, 1996). Browne and Cudeck (1993; see also Joreskog & Sorbom, 1993) suggest that RMSEAs less than .05 are indicative of a close fit and that values up to .08 represent reasonable errors of approximation.

Missing values. We have conducted some preliminary analyses to ensure that the subsample (n = 201), who had completed measures in 1994 (Time 1; T1) and in 1999 (Time 2; T2), was equivalent and thus representative of the whole sample. First, scores on motivational indexes (means of the four indicators for each motivation) at Time 1 were tested for mean differences between participants who complete the questionnaires at both waves (n = 201) and participants whose data were not available for Time 2 (n = 838). Means and standard deviations are presented

in Table 1. Results of a multivariate analysis of variance (MANOVA) indicated that all index means were equivalent across samples, $F(4, 1034) = .820$, *ns*. Second, the measurement model at Time 1 was tested for factorial invariance across the two samples (i.e., $n = 201, n = 838$). This model included Time-1 global motivation, academic motivation, leisure motivation and interpersonal relationship motivation. The overall fit of the unconstrained model for the multiple group analysis was excellent, $\chi^2(196, N = 1039) = 362.671$, CFI = .982, NNFI = .982, RMSEA = .040. Nested models were then created by constraining different components of the original model to be equal across samples (factor loadings, error variances, factor covariances). For each comparison between models, the chi-square statistics of all models were equivalent with a p value exceeding .05 (i.e., the chi-square difference test was nonsignificant). These results strongly suggest that the subsample ($n = 201$) was equivalent to the initial whole sample with respect to the variable's factorial structure.

Table 1. Means and Standard Deviations of motivational indicators for the total sample and the subsample who only completed measures at Time 1 and the subsample who completed measures at both times

	Total sample $N = 1039$		Subsample (T1 only) $n = 838$		Subsample (T1 + T2) $n = 201$	
	M	*SD*	*M*	*SD*	*M*	*SD*
Global self-determined motivation	9.04	4.02	9.38	3.99	9.04	4.02
Academic self-determined motivation	7.83	4.31	7.80	4.34	7.97	4.20
Leisure self-determined motivation	10.85	3.57	10.92	3.51	10.58	3.79
Interpersonal relationship self-determined motivation	10.14	4.12	10.17	4.09	10.01	4.25

Despite this fact, it would be inappropriate to disregard missing values by using a listwise deletion of cases. Indeed, the APA Task Force on Statistical Inferences discourages the use of Listwise deletion (see Peugh & Enders, 2004). In the same vein, Davey, Shanahan, and Schafer (2001) indicate that failure to deal with missing data results in a loss of statistical power.

In the present study, the Full Information Maximum Likelihood (FIML) approach (version 6.1 of EQS) was used to estimate missing values. Briefly, this methodology rebuilds the covariance matrix and the sample means estimates. In this way, the maximum function used is made of all non-missing data, resulting in more accurate results than in other traditional approaches to missing data. Jamshidian and Bentler (1999) concluded that the normal theory maximum likelihood estimates are preferred over other methods proposed to handle missing data (mean imputation, listwise, pairwise, regression imputation; see also Peugh

& Enders, 2004). Thus, analyses conducted in the following sections are based on a sample of 1039 participants in which missing values at Time 2 were estimated. However, one may be struck by the fact that only 201 participants completed each measurement waves and that we have decided to estimate missing data for the 838 participants who dropped out of the study. Consequently, we have also performed our various analyses on sample where missing values were not estimated (i.e., Listwise deletion of cases) though we definitively know that the power of such analyses will be affected.

RESULTS

Self-determined motivations and perceived psychological distress

Correlations, based on a confirmatory factor analysis (CFA), between latent constructs are presented in Table 3. The fit of the CFA model was good for both approaches to missing values: FIML and Listwise (see Table 2). Correlations based on the FIML approach indicated that the latent constructs were relatively independent but still related, as expected (see Table 3). However, the correlation between self-determined motivation in leisure and global self-determined motivation is relatively high. Similar findings were observed on the Listwise data set. For statistical power considerations, we based further interpretations on the FIML solution. Overall, CFA-FIML correlations provide more support for the contextual-effects perspective than for the perspective of personality-based effects. Indeed, although all initial self-determined motivations (i.e., global and contextual) were associated negatively to subsequent subjective psychological distress (correlations ranged between -.18 and -.29), it appears that global self-determined motivation is less correlated (-.18) with subjective psychological distress than self-determined motivation toward leisure (-.27), academic (-.20), and interpersonal relationships (-.29).

Table 2. Results of the multiple confirmatory factor analysis and structural equation modeling models

Models Tested	Chi-square	*df*	*N*	CFI	NNFI	RMSEA
		Confirmatory factor analysis				
FIML	325.370	160	1039	.991	.989	.032
Listwise	261.517	160	201	.957	.949	.056
		Structural equation modeling				
FIML	326.719	160	1039	.991	.989	.032
Listwise	261.517	160	201	.957	.949	.056

Table 3. Confirmatory factor analysis correlations among self-determined motivations and subjective psychological distress

	1	2	3	4	5
1. Global self-determined motivation	--	.67	.43	.56	-.18
2. Leisure self-determined motivation	.75	--	.52	.32	-.27
3. Interpersonal relationship self-determined motivation	.42	.50	--	.18	-.29
4. Academic self-determined motivation	.61	.30	.17	--	-.20
5. Perceived psychological distress	-.21	-.28	-.31	-.20	--

Note: All correlations are significant at $p < .05$. Correlations on the left side of the diagonal are based on a Listwise method of deletion of case. Correlations on the right side of the diagonal are based on a FIML solution to handle missing data.

Predictors of psychological distress

In the SEM model, correlations between the four motivational factors were freely estimated and all paths from the four motivational factors to the psychological distress index were freely estimated. Note that the SEM models tested here are equivalent to the corresponding CFA models in that the goodness of fit and

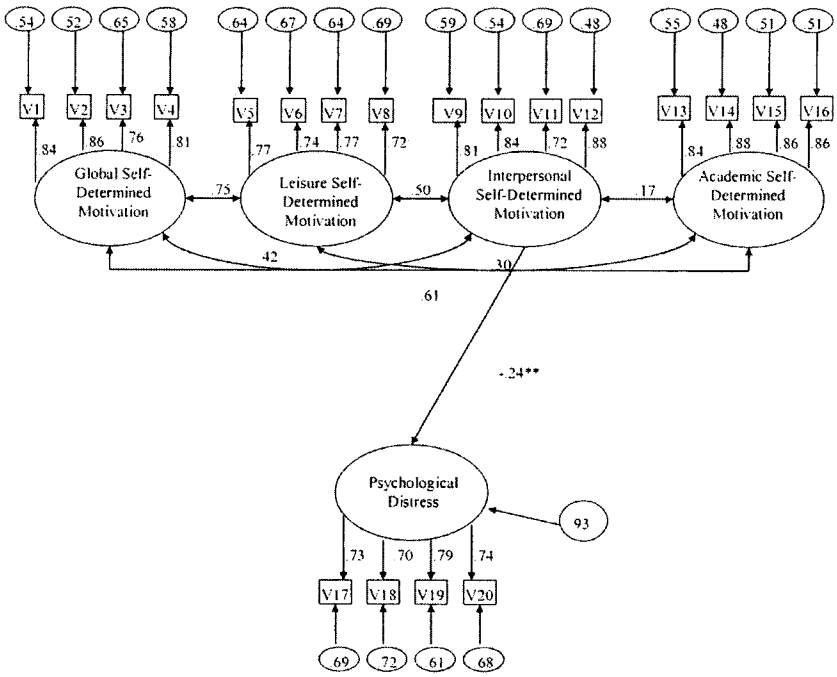

Figure 1. Results from the Listwise approach to missing data.

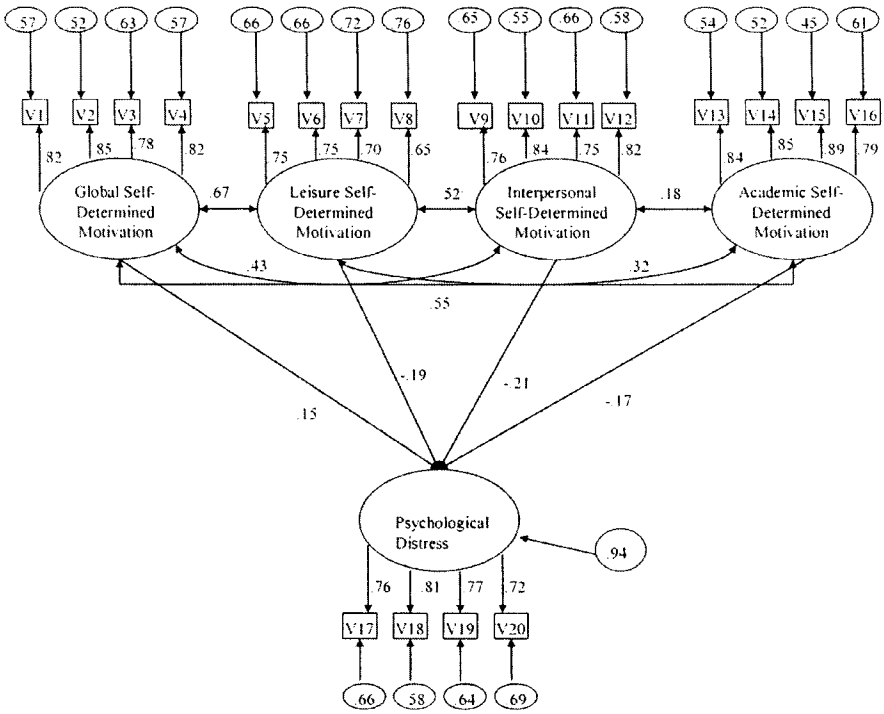

Figure 2. Results from the FIML approach to missing data.

degrees of freedom are the same, the factor loadings and uniquenesses are the same, and the remaining parameters (factor covariances in the CFA model; path coefficients, factor covariances in the SEM model) are merely reparameterizations of each other (see Table 2).

The goodness of fit of the Listwise and FIML models was good (see Table 2). These models are depicted respectively in Figure 1 and 2. In the most restrictive approach of Listwise deletion of cases (n = 201; see Figure 1), only one path was significant whereas in the FIML approach the four paths were significant. However, it is important to note that most people in the field of statistics will explain these differences by the fact that a Listwise approach to missing data has considerably reduced the statistical power (see Davey et al., 2001). For this reason, we base our interpretations on results from the FIML approach to missing data.

In the FIML model, psychological distress was negatively predicted by self-determined motivation toward interpersonal relationships (β = -.17), education

(β = -.21), and leisure (β = -.19) but positively by global self-determined motivation (β = .15). This unexpected positive relation is probably due to some minor multicolinearity problems because the correlation between global self-determined motivation and psychological distress is clearly negative (-.18) in the CFA models. Results suggest that global self-determined motivation acted as a suppressor variable in the model. Suppression generally occurs in regression model when two or more exogenous variables are highly correlated. In such case, the relation between one predictor and the criterion variable will be artificially inverted. According to Maassen and Bakker (2001), such a problem is more likely to occur in SEM models that include latent variables. Thus, the positive path connecting prior global self-determined motivation to subsequent subjective psychological distress is most probably a spurious one.

To bypass this suppression effect, we performed two supplementary SEM analyses in which we reduced the number of variables involved. In each analysis, global self-determined motivation and self-determined motivation in leisure were included to predict subjective psychological distress because the correlation between these two variables was very high (r = .67). Since the leisure scale was administrated just before the global scale, we suspect that the cognitive and affective inferences used to complete the global measure were those that were also used to complete the leisure scale. Thus, if we do not take into account this strong correlation between both constructs, we may overestimate the contribution of global self-determined motivation in the prediction of subjective psychological distress.

Consequently, the first analysis involves the three following predictors of psychological distress: global self-determined motivation, self-determined motivation in leisure, and self-determined motivation in education. The second analysis entails the three following predictors: global self-determined motivation, self-determined motivation in leisure, and self-determined motivation interpersonal relationships. Results of these two analyses indicated no significant path connecting prior global self-determined motivation to later subjective psychological distress (i.e., no significant suppression effect was observed) whereas significant paths were obtained for each contextual motivation. These analyses thus provide more convincing support for the fact that the positive path connecting prior global self-determined motivation to later subjective psychological distress obtained in the main analysis is a spurious one.

DISCUSSION

The aim of this study was to contrast two perspectives on the linkages between levels of self-determined motivation and subjective psychological distress. The first perspective posits that global self-determined motivation is more negatively related to psychological distress than contextual self-determined motivations in leisure, interpersonal relationships, and education (Vallerand, 1997). The second perspective, in contrast, posits that self-determined motivation in these three contexts are more negatively related to subjective psychological distress than global self-determined motivation (Marsh & Yeung, 1998). Overall, the findings of the study provided more support for the second perspective than for the first one though some additional work would be definitively needed to test more rigorously both perspectives. Some of the theoretical and methodological implications of these results will be discussed in the following sections.

Theoretical implications

Results from CFA analyses showed that, regardless of the level of generality assessed (global or contextual), self-determined motivation is negatively associated with subjective psychological distress of individuals five years later. Thus, people who are motivated in a self-determined way have satisfactory experiences, which are associated with less psychological distress. On the other hand, people who lack self-determination in their life feel that their actions do not reflect their personal choices and interests, which is associated with subjective psychological distress. These results support those of other studies that have focused on the relation between self-determination and well-being (Reis et al., 2000; Ryan & Deci, 2000; Kasser & Ryan, 1993, 1996; Ryan et al., 1995; Sheldon & Elliot, 1999; Sheldon & Kasser, 1995, 1998; Sheldon et al., 1996, 1997).

The present study integrates global and contextual motivations in order to understand subjective psychological distress. The integration of these two aspects of self makes it possible to test and compare the relative strength of the paths involving contextual and global self-determined motivations. Results suggest that the assessment of contextual self-determined motivations seems to be more useful than the assessment of global self-determined motivational representations for predicting subjective psychological distress. In fact, results from the FIML-SEM analysis showed that self-determined motivations in interpersonal relationships, leisure, and education are negatively associated with subjective psychological distress five years later. However, global self-determined motivation is positively and

significantly associated with subjective psychological distress. As we have argued earlier, this unexpected result reveals a suppression effect because subsequent analyses conducted to bypass this effect indicate no significant path connecting global self-determined motivation to later psychological distress whereas the paths of contextual motivations remain significant.

In addition, it appears important to note that previous research on self-concept reveals that global self-evaluation relies sometimes more on immediate experience or mood instead of pursuing the cognitively demanding task of making global self-inferences (Marsh & Yeung, 1998, 1999). In support for this explanation, we observed a correlation of .67 between leisure self-determined motivation and global self-determined motivation whereas the measure of leisure was placed just before the global one in the questionnaire. Consequently, participants may have used similar cognitions, feelings, and affect to answer both the leisure and the global measures (see Marsh & Yeung, 1999) thereby questioning the ability of our global measure to capture global inferences on self-determined motivation.

These results therefore suggest that individuals' well-being would be mainly related to their experiences in important areas of life. In other words, how individuals regulate their behaviors in their central life contexts seem to be more crucial to understand their levels of subjective psychological distress. These results also support those of several authors who demonstrated a relation between self-determination at the contextual level and psychological adjustment (Pelletier et al., 1995; Reis et al., 2000; Ryan, 1995; Sheldon et al., 1996, 1997).

However, in light of the pattern of results, it is also possible that global motivation plays a different role in the prediction of psychological distress. Thus, the global motivation level may not necessarily have a direct relation with subjective psychological distress. Indeed, global self-determined motivation could predispose individuals to be motivated in a self-determined manner in their areas of life, and these contextual motivations would in turn relate negatively with subjective psychological distress. Thus, additional research is necessary in order to test adequately such an hypothesis. For instance, a reciprocal effect model involving longitudinal data where repeated measures of the constructs are collected could be quite useful in this regard (see Guay, Mageau, & Vallerand, 2003).

Limitations and future studies

The present study has a number of limitations. First of all, results were obtained from the areas of interpersonal relationships, studies and leisure. Although these areas are considered to be the most important ones for young adults (Vallerand,

1997), it is likely that other areas, such as work as well as romantic and family relationships, are also related to the well-being of individuals (e.g., Senécal, Vallerand, & Guay, 2001). Future studies could include these life contexts in order to assess their relative importance for understanding subjective psychological distress.

It would also be useful to assess the model's validity with other population groups, in particular older adults. In fact, the students in our sample were 19 years of age when measured at Time 1. At that age, it is likely that the global motivational representations are not fully developed yet. These global representations are probably more developed in older adults and thus can be measured with less error, leading to stronger predictive relations with their level of psychological distress.

Furthermore, as the data used in this study are correlational, it was impossible to ascertain the direction of causality. Also, as the initial level of psychological distress was not measured, it was impossible to predict change over time on this variable. Therefore, we cannot tell if subjective psychological distress five years later was already present at the start of the study, or if it has developed (or diminished) during the five-year period, as a function of motivational dynamics. The use of a longitudinal design with repeated measurements of each variable in future studies could compensate for these shortcomings. However, the 5-year time frame used in this study makes it possible to assess the relations between self-determined motivation and psychological distress over time and to avoid the problem of shared method variance between motivations and subjective psychological distress.

In addition, one may suggest that if the second perspective states that global judgments on motivation/self-concept are not valid, then, we can apply the same line of reasoning for global measure of psychological distress. However, in a recent study, Eid and Diener (2003) conclude that the effects of immediate experiences (i.e., daily mood) on global aspects of subjective well-being are very small in magnitude and inconsistent thus providing support for the validity of global measure of subjective well-being. In other words, people do not report higher psychological distress because they complete the questionnaire on a rainy day. Of course, future research is needed to understand why self-report of global motivation seem to be influenced by immediate experience or feelings whereas this is not the case for global judgments of subjective psychological distress. Such an endeavor will increase our knowledge on the empirical and theoretical suitability of the global self-determined motivation construct. Clearly, the present research is too preliminary to discard the role of this variable in our understanding of human behavior.

In summary, despite the limitations mentioned, the present study demonstrates that it is relevant to assess the relation between self-determination and psychologi-

cal distress from a multi-levels perspective. In fact, results of analyses by structural equations show that it is important to focus on individual's motivational experiences in the significant areas of their life rather than assessing only their global self-determined motivation to predict subjective psychological distress. In conclusion, those who have seen the famous movie Pulp Fiction should remember the well-known dialogue on "personality" that take place between Jules (S. L. Jackson) and Vincent (J. Travolta) during a meal in which Jules claims, among other things, that personality goes a long way. Results of the present study seem to suggest another message regarding self-determined motivation and subjective psychological distress: life context goes a long way, not personality!

APPENDIX

Sample of items from the subscales of the four motivational scales

Subscales	Global Motivation Scale	Academic Motivation Scale	Interpersonal Motivation Scale	Leisure Motivation Scale
Intrinsic motivation	"In order to feel pleasant emotions" (intrinsic motivation to stimulation)	"Because I experience pleasure and satisfaction when learning new things"	"Because I have lots of fun with my friends"	"For the pleasure I feel when I have exciting experiences"
Identified regulation	"Because I choose them as means to attain my objectives"	"Because this will help me make a better choice regarding my career orientation"	"Because it's a great way to develop myself"	"Because I chose them as a mean to improve myself"
External regulation	"Because I want to be viewed more positively by certain people"	"In order to have a better salary later on"	"Because I don't want to be isolated from the other persons"	"To show other people that I'm a dynamic person"
Amotivation	"Although I do not see the benefit in what I am doing"	"I don't know; I can't understand what I am doing in school"	"I don't know; I'm not a sociable person"	"I don't know; I think that leisure is a waste of time"

REFERENCES

Abramson, L. Y., Seligman, M. E. P., & Teasdale, J. D. (1978). Learned helplessness in humans: Critique and reformulation. *Journal of Abnormal Psychology, 87*, 49-74.

Bentler, P. M. (1990). Comparative fit indices in structural models. *Psychological Bulletin, 107*, 238-246.

Bentler, P. M. (1993). *EQS: Structural equation program manual.* Los Angeles: BMDP Statistical Software.

Blais, M. R., Vallerand, R. J., Pelletier, L. G., & Brière, N. M. (1994). Construction et validation de l'inventaire des motivations interpersonnelles [Construction and validation of the motivational inventory for interpersonal relationships]. Unpublished manuscript, Université du Québec à Montréal, Montréal, Canada.

Boyer, R., Préville, M., Légaré, G., & Valois, P. (1993). Psychological distress in the non-institutionalized population of Quebec: Normative results from the "Quebec Health" survey. *Canadian Journal of Psychiatry, 38*(5), 339-343.

Bretherton, I. (1985). Attachment theory: Retrospect and prospect. *Monographs of the Society for Research in Child Development, 50*(1-2), 3-35.

Brown, J. D. (1993). Self-esteem and self-evaluation: Feeling is believing. In J. Suls (Ed.), *Psychological perspectives on the self* (pp. 27-58). Hillsdale, NJ: Erlbaum.

Browne, M. W., & Cudeck, R. (1993). Alternative ways of assessing model fit. In K. Bollen & J. S. Long (Eds.), *Testing structural equation models* (pp. 136-162). Newbury Park, CA: Sage.

Davey, A., Shanahan, M. J., & Schafer, J. L. (2001). Correcting for selective nonresponse in the National Longitudinal Survey of Youth using multiple imputation. *Journal of Human Resources, 36*, 500-519.

Deci, E. L. (1975). *Intrinsic motivation.* New York: Plenum.

Deci, E. L., & Ryan, R. M. (1985). *Intrinsic motivation and self-determination in human behavior.* New York: Plenum.

Deci, E. L., & Ryan, R. M. (1991). A motivational approach to self: Integration in personality. In R. Dienstbier (Ed.), *Nebraska Symposium on Motivation: Vol. 38. Perspectives on motivation* (pp. 237-288). Lincoln, NE: University of Nebraska Press.

Derogatis, L. R., & Melisaratos, N. (1983). SCL-90: An outpatient psychiatric rating scale - Preliminary report. *Psychopharmacology Bulletin, 9*, 13-28.

Diener, E., Shigehiro, O., & Lucas, R. E. (2003). Personality, culture, and subjective well-being: Emotional and cognitive evaluations of life. *Annual Review of Psychology, 54*, 403-425.

Eid, M., & Diener, E. (2004). Global judgments of subjective well-being: Situational variability and long-term stability. *Social Indicators Research, 65*(3), 245-277.

Emmons, R. A. (1995). Levels and domains in personality: An introduction. *Journal of Personality, 63*, 341-364.

Fairchild, A. J., Horst, S. J., Finney, S. J., & Barron, K. E. (2005). Evaluating existing and

new validity evidence for the Academic Motivation Scale. *Contemporary Educational Psychology, 30*(3), 331-358.

Fortier, M. S., Vallerand, R. J., & Guay, F. (1995). Academic motivation and school performance: Toward a structural model. *Contemporary Educational Psychology, 20*, 257-274.

Gouvernement du Québec. (1995). *Et la santé, ça va?* [How is your health going?] (Report of the Social and Health Study 1992-1993: Volume 1). Quebec, Canada: Author.

Grolnick, W. S., & Ryan, R. M. (1987). Autonomy in children's learning: An experimental and individual difference investigation. *Journal of Personality and Social Psychology, 52*, 890- 898.

Guay, F. (2006). *Self-concept and motivation*. Unpublished raw data, Université Laval, Québec, Canada.

Guay, F., Blais, M. R., Pelletier, L. G., & Vallerand, R. J. (1999). *Construction et validation de l'Échelle de Motivation Globale* [Construction and validation of the Global Motivation Scale]. Unpublished manuscript, Université du Québec à Montréal, Montréal, Canada.

Guay, F., Mageau, G. A., & Vallerand, R. J. (2003). On the hierarchical structure of self-determined motivation: A test of top-down, bottom-up, reciprocal, and horizontal effects. *Personality and Social Psychology Bulletin, 29*(8), 992-1004.

Guay, F., Senécal, C., Gauthier, L., & Fernet, C. (2003). Predicting career indecision: A Self-Determination Theory perspective. *Journal of Counseling Psychology, 50*(2), 165-177.

Guay, F., & Vallerand, R. J. (1997). Social context, students' motivation, and academic achievement: Toward a process model. *Social Psychology of Education, 1*, 211-233.

Ilfeld, F. W. (1976). Further validation of a psychiatric symptom index in a normal population. *Psychological Report, 39*, 1215-1228.

Jamshidian, M., & Bentler, P. M. (1999). ML estimation of mean and covariance structures with missing data using complete data routines. *Journal of Educational and Behavioral Statistics, 24*(1), 21-41.

Joreskog, K. G., & Sorbom, D. (1993). *LISREL 8: Structural equation modeling with the SIMPLIS command language*. Chicago: Scientific Software International.

Kasser, T., & Ryan, R. M. (1993). A dark side of American dream: Correlates of financial success as a central life aspiration. *Journal of Personality and Social Psychology, 65*, 410-422.

Kasser, T., & Ryan, R. M. (1996). Further examining the American dream: Differential correlates of intrinsic and extrinsic goals. *Personality and Social Psychology Bulletin, 22*, 280-287.

Kessler, R. C., McGonagle, K. A., Zhao, S., Nelson, C. B., Ughes, M., Eshleman, S., Wittchen, H. U., & Kendler, K. S. (1994). Lifetime and 12-month prevalence of DSM-III-R psychiatric disorders in the United States: Results from the national comorbidity survey. *Archives of General Psychiatry, 51*, 8-19.

Koestner, R., Bernieri, F., & Zuckerman, M. (1992). Self-regulation and consistency between attitudes, traits and behaviors. *Personality and Social Psychology Bulletin, 18*, 52-59.

Lepper, M. R., Greene, D., & Nisbett, R. E. (1973). Undermining children's interest with extrinsic rewards: A test of the «overjustification effect». *Journal of Personality and Social Psychology, 28*, 129-137.

Maassen, G. H., & Bakker, A. B. (2001). Suppressor variables in path models: Definitions and interpretations. *Sociological Methods & Research, 30*(2), 241-270.

Marsh, H. W. (1990). A multi-dimensional, hierarchical self-concept: Theoretical and empirical justification. *Educational Psychological Review, 2*, 77-172.

Marsh, H. W., & Yeung, A. S. (1998). Top-down, bottom-up, and horizontal models: The direction of causality in multidimensional, hierarchical self-concept models. *Journal of Personality and Social Psychology, 75*, 509-527.

Marsh, H. W., & Yeung, A. S. (1999). The liability of psychological ratings: The chameleon effect in global self-esteem. *Personality and Social Psychology Bulletin, 25*(1), 49-64.

McAdams, D. P. (1995). What do we know when we know a person? *Journal of Personality, 63*, 365-396.

Neyer, F. J., & Asendorpf, J. B. (2001). Personality-relationship transaction in young adulthood, *Journal of Personality and Social Psychology, 81*(6), 1190-1204.

Nix, G. A., Ryan, R. M., Manly, J. B., & Deci, E. L. (1999). Revitalization through self-regulation: The effects of autonomous and controlled motivation on happiness and vitality. *Journal of Experimental Social Psychology, 35*, 266-284.

Pelletier, L. G., Vallerand, R. J., Green-Demers, I., Brière, N. M., & Blais, M. R. (1995). Loisirs et santé mentale: Les relations entre la motivation pour la pratique des loisirs et le bien-être psychologique [Leisure and mental health: The relations between motivation toward leisure and subjective well-being]. *Revue Canadienne des Sciences du Comportement, 27*, 140-156.

Peugh, J. L., & Enders, C. K. (2004). Missing data in educational research: A review of reporting practices and suggestions for improvement. *Review of Educational Research, 74*(4), 525-556.

Régier, D. A., Narrow, W. E., Rae, D. S., Manderscheid, R. W., Locke, B. Z., & Goodwin, F. K. (1993). The de facto US mental and addictive disorders service system: Epidemiologic catchment area prospective 1-year prevalence rates of disorders and services. *Archives of General Psychiatry, 50*, 85-94.

Reis, H. T., Sheldon, K. M., Gable, S. L. K., Roscoe, J., & Ryan, R. M. (2000). Daily well-being: The role of autonomy, competence and relatedness. *Personality and Social Psychology Bulletin, 26*, 419-435.

Ryan, R. M. (1995). Psychological needs and the facilitation of integrative processes. *Journal of Personality, 63*, 397-424.

Ryan, R. M., & Connnell, J. P. (1989). Perceived locus of causality and internalization: Examining reasons for acting in two domains. *Journal of Personality and Social Psychology, 57*, 749-761.

Ryan, R. M., Chirkov, V. I., Little, T. D., Sheldon, K. M., Timoshina, E., & Deci, E. L. (1999). The American dream in Russia: Extrinsic aspirations and well- being in two cultures. *Personality and Social Psychology Bulletin, 25*, 1509-1525.

Ryan, R. M., & Deci, E. L. (2000). Self-determination theory and the facilitation of intrinsic motivation, social development, and well-being. *American Psychologist, 55*, 68-78.

Ryan, R. M., Deci, E. L., & Grolnick, W. S. (1995). Autonomy, relatedness, and the self: Their relation to development and psychopathology. In D. Cicchetti & D. J. Cohen (Eds.), *Developmental psychopathology: Vol. 1. Theory and methods* (pp. 618-655). New York: Wiley.

Ryan, R. M., & Frederick, C. M. (1997). On energy, personality, and health: Subjective vitality as a dynamic reflection of well-being. *Journal of Personality, 65*, 529-565.

Sanderson, C. A., & Cantor, N. (1999). A life task perspective on personality coherence: Stability versus change in tasks, goals, strategies, and outcomes. In D. Cervone & Y. Shoda (Eds.), *The coherence of personality: Social-cognitive bases of consistency, variability, and organization* (pp. 372-392). New York: Guilford.

Schumacker, R. E., & Lomax, R. G. (1996). *A beginner's guide to structural equation modeling*. Mahwah, NJ: Erlbaum.

Shavelson, R. J., Hubner, J. J., & Stanton, G. C. (1976). Self-concept: Validation of construct interpretations. *Review of Educational Research, 46*, 407-441.

Senécal, C., Vallerand, R. J., & Guay, F. (2001). Antecedents and outcomes of work-family conflict: Toward a motivational model. *Personality and Social Psychology Bulletin, 27*, 176-186.

Sheldon, K. M., & Elliot, A. J. (1999). Goal striving, need satisfaction and longitudinal well-being: The self-concordance model. *Journal of Personality and Social Psychology, 76*, 482-497.

Sheldon, K. M., & Kasser, T. (1995). Coherence and congruence: Two aspects of personality integration. *Journal of Personality and Social Psychology, 68*, 531-543.

Sheldon, K. M., & Kasser, T. (1998). Pursuing personal goals: Skills enable progress, but not all progress is beneficial. *Personality and Social Psychology Bulletin, 24*, 1319-1331.

Sheldon, K. M., Ryan, M. R., Rawsthorne, J. L., & Ilardi, B. (1997). Trait self and true self: Cross-role variation in the Big-Five personality traits and its relations with psychological authenticity and subjective well-being. *Journal of Personality and Social Psychology, 73*, 1380-1393.

Sheldon, K. M., Ryan, M. R., & Reis, H. T. (1996). What makes for a good day? Competence and autonomy in the day and in the person. *Personality and Social Psychology Bulletin, 22*, 1270-1279.

Vallerand, R. J. (1997). Toward a hierarchical model of intrinsic and extrinsic motivation. *Advances in Experimental Social Psychology, 29*, 271-361.

Vallerand, R. J., & Bissonnette, R. (1992). Intrinsic, extrinsic, and amotivational styles as predictors of behavior: A prospective study. *Journal of Personality, 60*, 599-620.

Vallerand, R. J., Blais, M. R., Brière, N. M., & Pelletier, L. G. (1989). Construction et validation de l'échelle de motivation en éducation (EME) [Construction and validation of the Academic Motivation Scale]. *Canadian Journal of Behavioural Science, 21*, 323-349.

Vallerand, R. J., Fortier, M. S., & Guay, F. (1997). Self-determination and persistence in a

real-life setting: Toward a motivational model of high-school drop-out. *Journal of Personality and Social Psychology, 72*, 1161-1176.

Vallerand, R. J., Pelletier, L. G., Blais, M. R., Brière, N. M., Senécal, C., & Vallières, E. (1992). The academic motivation scale: A measure of intrinsic, extrinsic, and amotivation in education. *Educational and Psychological Measurement, 52*(4), 1003-1017.

Vallerand, R. J., Pelletier, L. G., Blais, M. R., Brière, N. M., Senécal, C., & Vallière, E. (1993). On the assessment of intrinsic, extrinsic, and amotivation in education. Evidence on the concurrent and construct validity of the Academic Motivation Scale. *Educational and Psychological Measurement, 53*, 159-172.